ORTAL
YOUR LIFE. YOUR FIRE

110 LSN

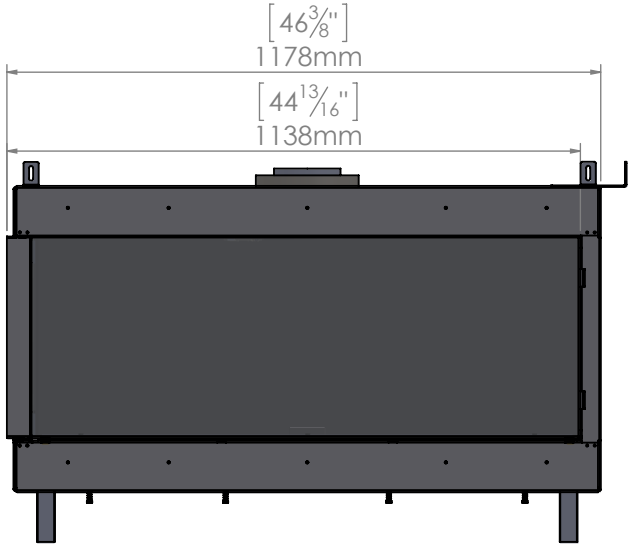

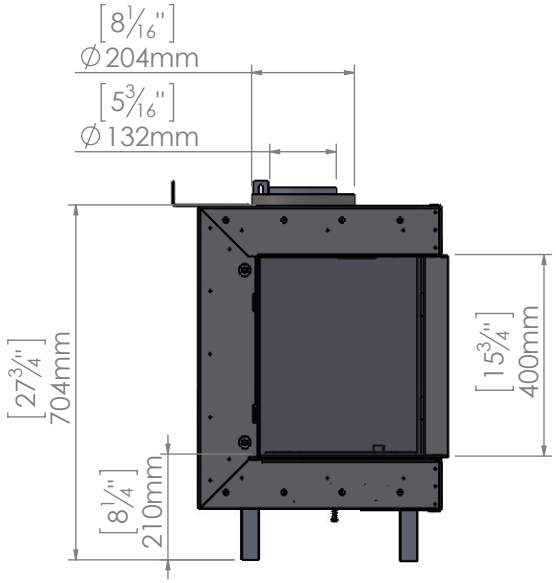

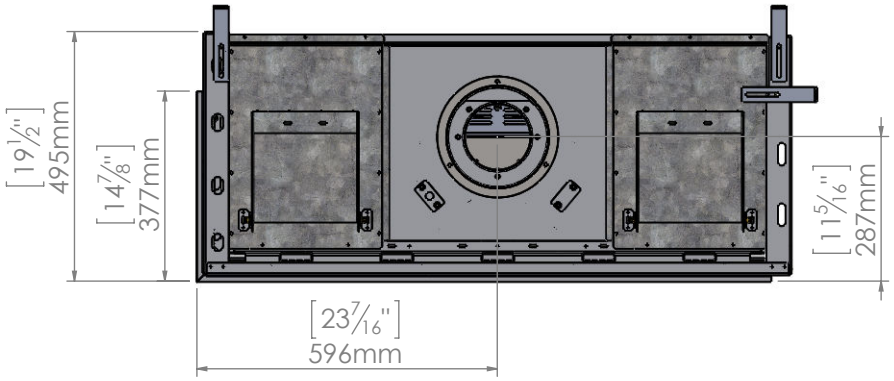

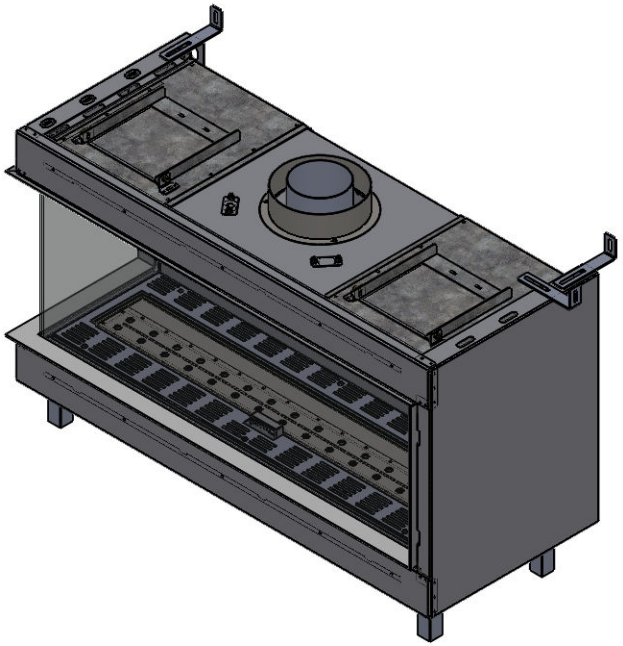

11/12/2018