ORTAL
YOUR LIFE. YOUR FIRE

200 LSN

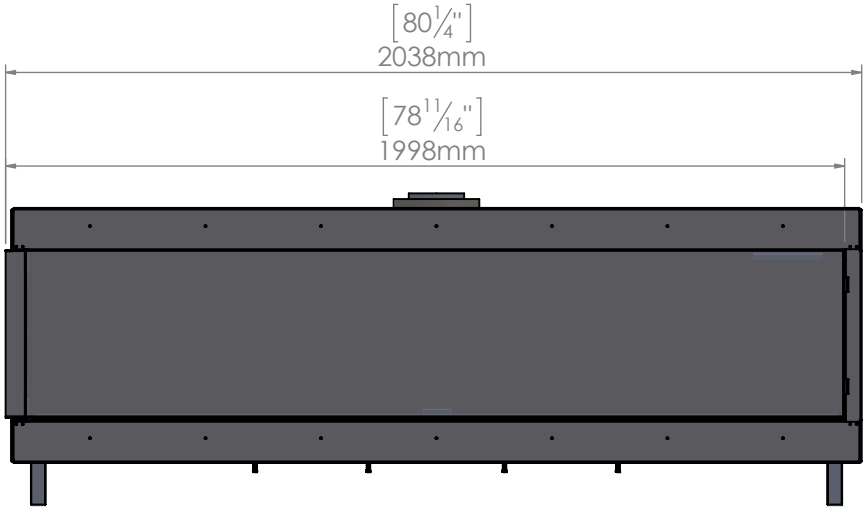

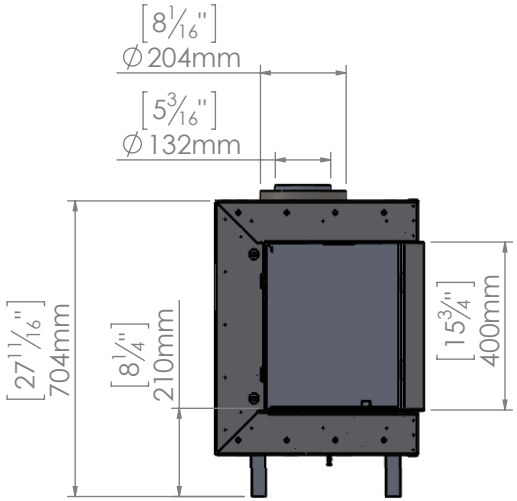

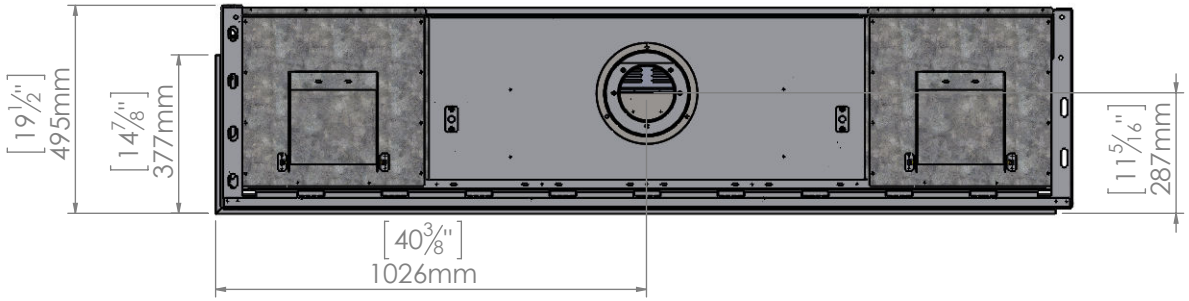

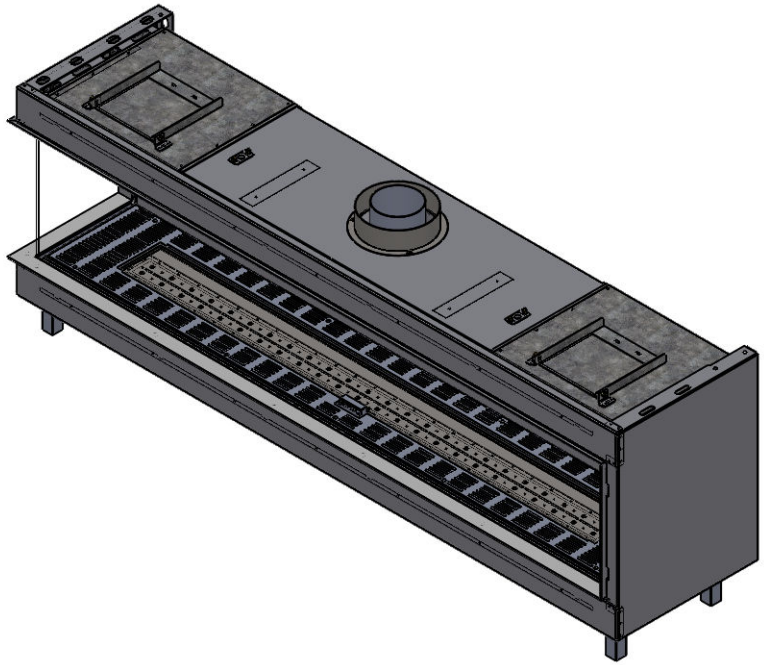

11/13/2018