ORTAL
YOUR LIFE. YOUR FIRE

250H RS

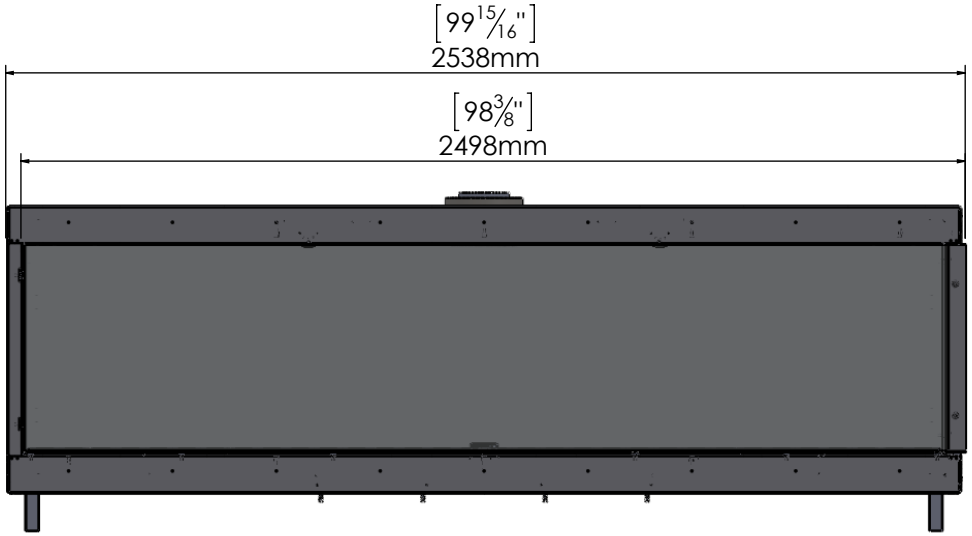

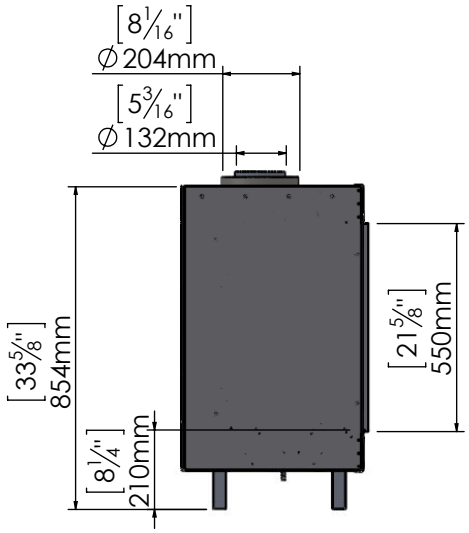

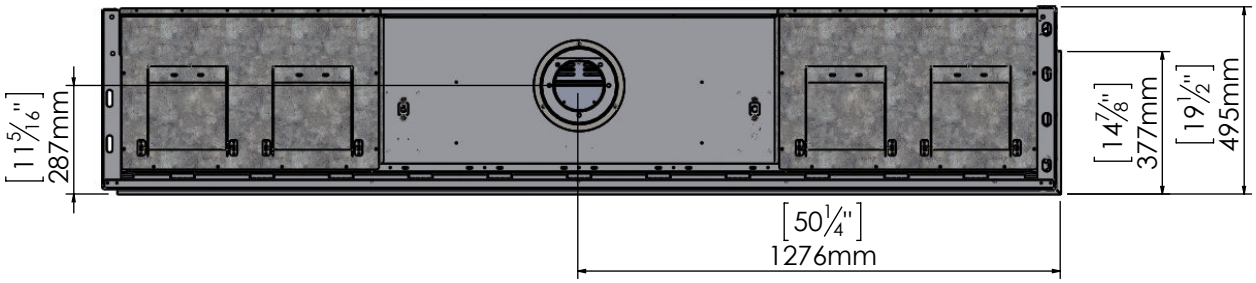

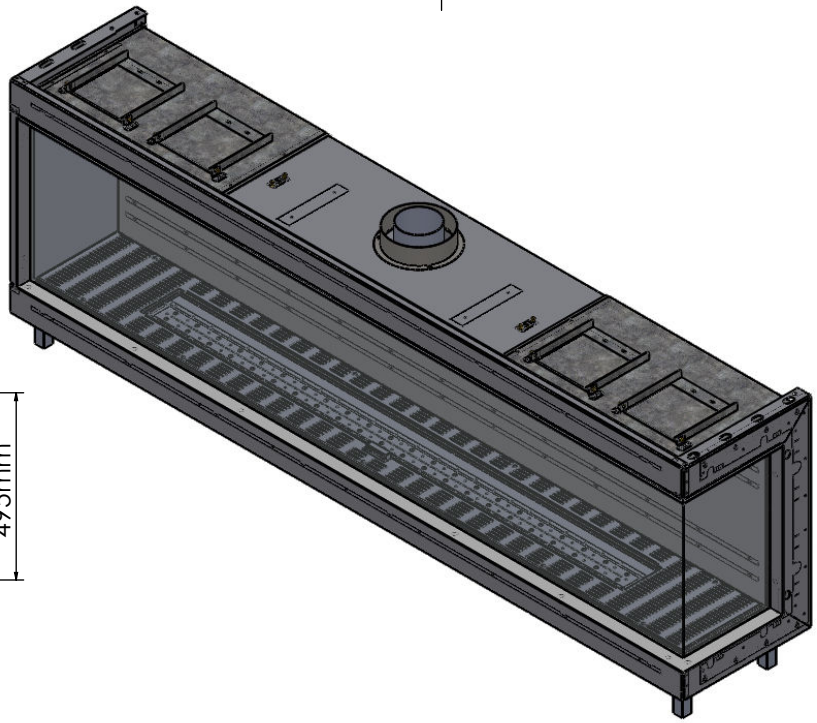

11/21/2018